# WALL MOUNTING GARAGE VACUUM 1200W, REMOTE CONTROL,10M VACUUM HOSE

MODEL NO: **GV180WM.V2**

**Thank you for purchasing a Sealey product. Manufactured to a high standard, this product will, if used according to these instructions, and properly maintained, give you years of trouble free performance.**

**IMPORTANT:** PLEASE READ THESE INSTRUCTIONS CAREFULLY. NOTE THE SAFE OPERATIONAL REQUIREMENTS, WARNINGS & CAUTIONS. USE THE PRODUCT CORRECTLY AND WITH CARE FOR THE PURPOSE FOR WHICH IT IS INTENDED. FAILURE TO DO SO MAY CAUSE DAMAGE AND/OR PERSONAL INJURY AND WILL INVALIDATE THE WARRANTY. KEEP THESE INSTRUCTIONS SAFE FOR FUTURE USE.

Read before first use

Wear protective clothing

Wear protective gloves

Wear eye protection

Wear a mask

Batteries in product

**⚠ BATTERY WARNING ⚠**

**KEEP OUT OF REACH OF CHILDREN**
Swallowing can lead to chemical burns, perforating of soft tissue, and death. Severe burns can occur within 2 hours of ingestion. Seek medical attention immediately.

## 1. SAFETY

▲ **CAUTION:** Read the instruction manual before using the machine.

### 1.1. ELECTRICAL SAFETY

❑ **WARNING!** It is the user's responsibility to check the following:

✓ Check all electrical equipment and appliances to ensure that they are safe before using. Inspect power supply leads, plugs and all electrical connections for wear and damage. Sealey recommend that an RCD (Residual Current Device) is used with all electrical products.

**Electrical safety information. It is important that the following information is read and understood:**

✓ Ensure that the insulation on all cables and on the appliance is safe before connecting it to the power supply.

✓ Regularly inspect power supply cables and plugs for wear or damage and check all connections to ensure that they are secure.

**IMPORTANT:** Ensure that the voltage rating on the appliance suits the power supply to be used and that the plug is fitted with the correct fuse.

× **DO NOT** pull or carry the appliance by the power cable.

× **DO NOT** pull the plug from the socket by the cable.

× **DO NOT** use worn or damaged cables, plugs or connectors. Ensure that any faulty item is repaired or is replaced immediately by a qualified electrician.

If the cable or plug is damaged during use, switch off the electricity supply and remove from use. If the supply cord is damaged, it must be replaced by the manufacturer, its service agent or similarly qualified persons in order to a void a hazard.

### 1.2. GENERAL SAFETY

❑ **WARNING!** Children shall **NOT** play with the appliance.

❑ **WARNING!** Cleaning and user maintenance on the appliance shall not be made by children without supervision.

❑ **WARNING!** This machine is not intended for use by persons (including children) with reduced physical, sensory, or mental capabilities, or lack of experience and knowledge.

✓ This machine is intended for commercial use, for example in hotels, schools, hospital, factories, shops, offices, and rental business.

✓ Children should be supervised to ensure that they do not play with the appliance.

✓ The appliance shall be disconnected from its power source during service and when replacing parts.

❑ **WARNING!** Operators shall be adequately instructed on the use of these machines.

❑ **WARNING!** This machine is not suitable for picking up hazardous dust.

❑ **WARNING!** This machine is for dry use only.

▲ **CAUTION:** This machine is for indoor use only.

▲ **CAUTION** : This machine shall be stored indoors only.

✓ Use only genuine parts and accessories. Unauthorised parts and accessories may be dangerous and will invalidate your warranty.

✓ Maintain the cleaner in good condition. Use an authorised agent for servicing. Keep machine clean, but **DO NOT** use solvents.

× **DO NOT** operate the unit without the cartridge filter. Using the cleaner without a cartridge filter may cause damage to the vacuum cleaner and will invalidate your warranty.

✓ Wear protective clothing and gloves when appropriate.

× **DO NOT** place attachments close to your face (especially eyes, ears, etc). **DO NOT** point the hose end at other persons or animals.

▲ **DANGER! DO NOT** vacuum hot or glowing ash, cigarette ends, inflammable, explosive, corrosive or other dangerous substances.

× **DO NOT** leave machine running unattended. Turn power supply OFF, and **DO NOT** leave the vicinity until motor has come to a complete stop.

× **DO NOT** operate the cleaner while under the influence of drugs, alcohol or impairing medication, or if you are tired.

× **DO NOT** use the cleaner in the rain or in very damp conditions.

× **DO NOT** use the cleaner for a task it is not designed to perform.

✓ When not in use, store the cleaner in a safe, dry, childproof location.

## 2. INTRODUCTION

Robust, wall mounting, remote control, wet and dry vacuum cleaner. Fitted with a powerful 1200W motor and noise diffuser, this unit is ideal for use in garage and workshop environments. Features an 10m flexible spring hose, ideal for double garages. Also features remote control buttons to allow the user to turn the unit on/off. Includes 5m power cable,
2 x extension lances, combo brush, round brush, deluxe car nozzle, crevice tool, washable cartridge filter, foam filter and dust bag.

© Jack Sealey Limited

## 3. SPECIFICATION

| | |
|---|---|
| **Model No:** | GV180WM.V2 |
| Airflow: | 79.8m³/hr |
| Remote Control Battery: | UN38.3 |
| Drum Size: | 13L |
| Electrical Class: | Class II |
| Filter Type: | Cartridge Filter |
| Fuse Rating: | 13A |
| Maximum Vacuum Pressure: | 210mbar |
| Motor Power: | 1200W |
| Nett Weight: | 10.8kg |
| Power Supply Cable Length: | 1.5m |

| | |
|---|---|
| Supply: | 230V |
| Vacuum Accessories Diameter: | Ø38mm |
| A Weighted Sound Power Level: | 92.75dB (L WA) |

## 4. CONTENTS

See attached parts list for more information.

| Item | Description |
|---|---|
| 1 | Tank Clip (Upper) |
| 2 | Control switch Selector |
| 3 | Tank Clip (Upper) |
| 4 | Dust Hopper Clip |
| 5 | Dust Hopper |
| 6 | Dust Cover |
| 7 | Dust Hopper Clip |
| 8 | Flexible Hose (10m) |
| 9 | Delux Car Nozzle |
| 10 | Air Inlet |

fig.1

**NOTE:** Cartridge filter (GV180WMCF) and Foam filter (GV180WMFF) replacements can be ordered from your local Sealey stockists.

## 5. ASSEMBLY

❑ **WARNING!** Make sure the mains plug is disconnected before assembling the vacuum.

**5.1. MOUNTING BRACKET**

× **DO NOT** mount the bracket more than 1.5m from the floor.

× **DO NOT** hang from or sit on the mounting bracket.

× **DO NOT** exceed the 18.16kg maximum weight.

5.1.1. Choose a concrete or brick wall that is not more than 4.6 metres away from an electrical socket. Use the mounting bracket as a template ensuring the bracket is level on the wall before marking the required holes.

5.1.2. Mark the wall ready for drilling.

5.1.3. Drill four holes required into the concrete or brick wall, secure the wall bracket using the supplied M8 rawl bolts.

5.1.4. Mount the hose storage bracket onto the wall using the supplied hardware.

5.1.5. Mount the vacuum onto the wall bracket.

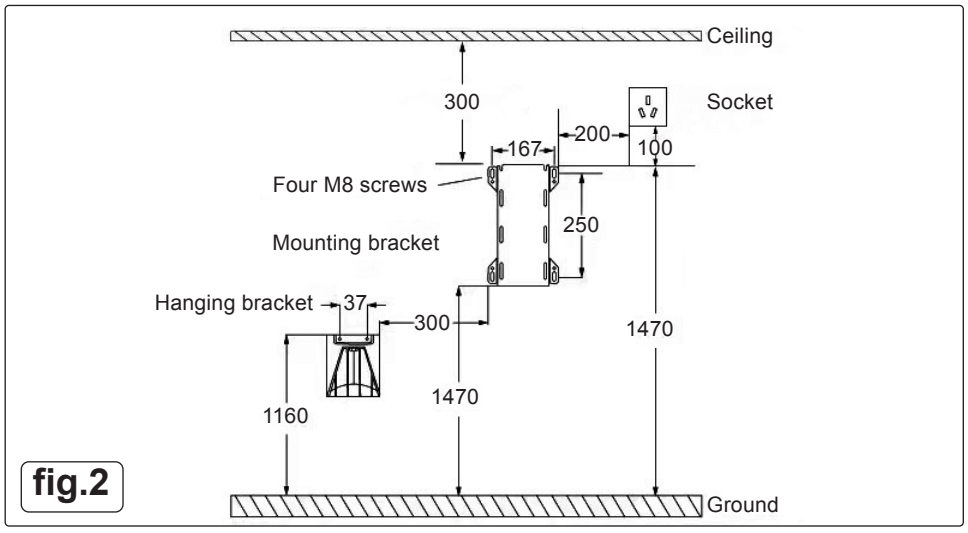


fig.2

**5.2. INSTALLING THE CARTRIDGE FILTER**

5.2.1. Make sure the power cord is disconnected from the mains supply.

5.2.2. Remove the power head and place upside down.

5.2.3. Install the cartridge filter over the filter cage with the flat end of the filter towards the vacuum power head. Carefully push filter in until it stops against the power head.

5.2.4. Place filter retainer on top of cartridge filter and tighten down by turning retainer clockwise. **DO NOT** over tighten.

## 6. OPERATION

**6.1. VACUUMING**

6.1.1. Insert the locking end of the hose into the vacuum port and lock in place. Push the required attachment onto the free end of the hose or extension.

6.1.2. Plug power cord into the mains supply.

6.1.3. Turn the motor on by turning the switch to the 'I' ON position. Fig.3. For remote control use, select the power switch to remote control position.

6.1.4. Once you have finished vacuuming, turn the switch to the 'O' OFF position or press the OFF button on the remote control for at least one second.

**6.1.5. WARNING! DO NOT** vacuum drywall dust, soot or ash. This is very fine dust which will not be captured by the filter and may cause damage to the motor and void the warranty.

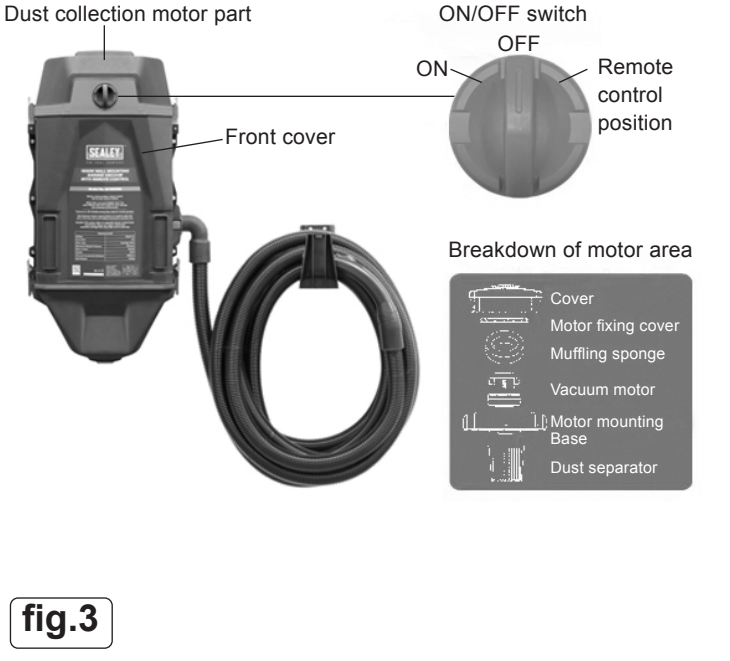


fig.3

## 7. MAINTENANCE

- ❑ **WARNING!** Always disconnect the plug from the mains supply before removing the power head from the container.
- ❑ **WARNING!** Check the hose, attachments and power cord to check that they have not been damaged.

**IMPORTANT:** Clean or change the cartridge filter regularly for best performance. ALWAYS USE CARTRIDGE FILTER FOR DRY VACUUMING. If the machine is used without the cartridge filter, the motor will burn out and the warranty will be voided. Always keep spare filters on hand.
The filters are made of high quality materials designed to stop small dust particles. The cartridge filter and dust collection bag should be used for dry pick-up only. A dry cartridge filter is necessary to pick up dust. If the cartridge filter is wet, it will clog quickly and be difficult to clean. Handle the filter carefully when removing it for cleaning or replacing. Check the filters for tears or small holes. A small hole can let dust pass through and out of the cleaner. **DO NOT** use a filter with holes or tears, replace it immediately.

**7.1. REMOVING AND CLEANING THE CARTRIDGE FILTER**

7.1.1. Unlock and remove the filter retainer by turning the retainer anticlockwise.

7.1.2. Carefully hold and pull the cartridge filter up for removal.

7.1.3. Clean the cartridge filter by gently tapping or brushing dirt off. Cleaning should not be done indoors. For optimal performance a new filter is recommended.

7.1.4. Install cleaned filter, refer to 7.1. (INSTALLING THE CARTRIDGE FILTER).

**7.2. CHANGING BATTERY IN THE REMOTE CONTROL**

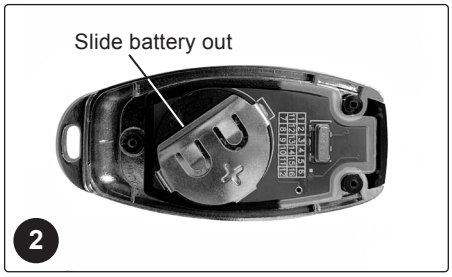


1. Remove the three screws in the back of the remote control. Care must be taken when removing the back plate.
2. Replace battery by sliding battery out from under the metal clip. Replace with new battery.

**7.3. CLEANING**

7.3.1. The vacuum cleaner MUST be kept clean and dry and must be maintained in accordance with these instructions.

**7.4. SERVICE**

7.4.1. Have your vacuum cleaner serviced by a qualified repair person using only identical replacement parts. This will ensure that the safety of the vacuum cleaner is maintained.

**7.5. END OF SERVICE**

7.5.1. Through years of normal wear, the vacuum cleaner will eventually become unserviceable. When this happens ensure that it is disposed of in accordance with local authority regulations.

**7.6. BATTERY SAFETY INSTRUCTIONS**

**Important Safety Information**

To ensure safe usage of batteries and compliance please follow these guidelines carefully. Failure to follow these instructions may result in injury, product damage, or battery malfunction.

**7.6.1. GENERAL BATTERY SAFETY**

- Keep batteries out of the reach of children. Button and coin batteries are hazardous if swallowed.
- Always use the correct battery type as specified in this manual.
- Ensure proper polarity (+/-) alignment when inserting batteries.
- **DO NOT** attempt to recharge non-rechargeable batteries.
- Replace all batteries at the same time using batteries of the same type and brand.
- **DO NOT** mix old and new batteries or different types of batteries.

**7.6.2. CHILD SAFETY PRECAUTIONS**

- Ensure that battery compartments are securely closed. If damaged, discontinue product use immediately.
- Dispose of used batteries promptly and safely, keeping them out of reach of children.
- If a battery is accidentally swallowed, seek immediate medical attention. Provide medical professionals with the battery identification details.

**7.6.3. HANDLING AND STORAGE**

- Store batteries in a cool, dry place, away from direct sunlight and heat sources.
- **DO NOT** store loose batteries together; keep them in original packaging or a designated battery container.
- Avoid storing batteries near metallic objects to prevent short circuits.
- Never attempt to disassemble, puncture, or crush batteries.

**7.6.4. DISPOSAL INSTRUCTIONS**

- Follow local regulations for battery disposal and recycling.
- **DO NOT** incinerate or dispose of batteries in household waste.
- Contact your local waste management facility for safe battery disposal options.

**7.6.5. EMERGENCY PROCEDURES**

- In case of battery leakage, avoid contact with skin or eyes. Rinse affected areas with plenty of water and seek medical advice.
- If a battery is accidentally ingested, contact a healthcare provider immediately.

## 8. TROUBLESHOOTING

| Problem | Possible Causes | Corrective Action |
|---|---|---|
| Vacuum will not operate. | No power supply. | Check power supply: cord, breakers, fuses. |
| | Faulty power cord. | Unplug and check the power cord.<br>If damaged, have it repaired by a professional. |
| | Container full. | Empty container. |
| | Switch in wrong position. | Press the ON ‘I’ button on the power head. |
| Dust comes from the motor cover. | The cartridge filter is missing or damaged. | Attach or replace cartridge filter. |
| Reduced efficiency and motor speed/vibration. | Blockage in the nozzle, hose, or the vacuum inlets. Or the dust filter is blocked by fine dust. | Check nozzle, hose and container inlets for blockage. Take off the filter and clean it, or install a new cartridge filter. |
| Remote will not operate. | Battery is dead. | Replace the battery. |

**ENVIRONMENT PROTECTION**

Recycle unwanted materials instead of disposing of them as waste. All tools, accessories and packaging should be sorted, taken to a recycling centre and disposed of in a manner which is compatible with the environment. When the product becomes completely unserviceable and requires disposal, drain any fluids (if applicable) into approved containers and dispose of the product and fluids according to local regulations.

REGISTER YOUR PURCHASE HERE

**WEEE REGULATIONS**

Dispose of this product at the end of its working life in compliance with the EU Directive on Waste Electrical and Electronic Equipment (WEEE). When the product is no longer required, it must be disposed of in an environmentally protective way. Contact your local solid waste authority for recycling information.

**NOTE:** It is our policy to continually improve products and as such we reserve the right to alter data, specifications and component parts without prior notice. Please note that other versions of this product are available. If you require documentation for alternative versions, please email or call our technical team on technical@sealey.co.uk or 01284 757505.
**IMPORTANT:** No Liability is accepted for incorrect use of this product.
**WARRANTY:** Guarantee is 12 months from purchase date, proof of which is required for any claim.

**Jack Sealey Ltd t/a Sealey Group,** Kempson Way, Suffolk Business Park, Bury St Edmunds, Suffolk, IP32 7AR UK
**Jack Sealey (EU) Ltd t/a Sealey Group,** Farney Street, Carrickmacross, Co. Monaghan, A81 PK68 Ireland
**Tel:** 01284 757500 ▪ **Email:** sales@sealey.co.uk ▪ **Web:** www.sealey.co.uk

© Jack Sealey Limited